Parts Information:

60cm Chimney Cooker Hood with Carbon Filters - Matte Black

Model No: DH451

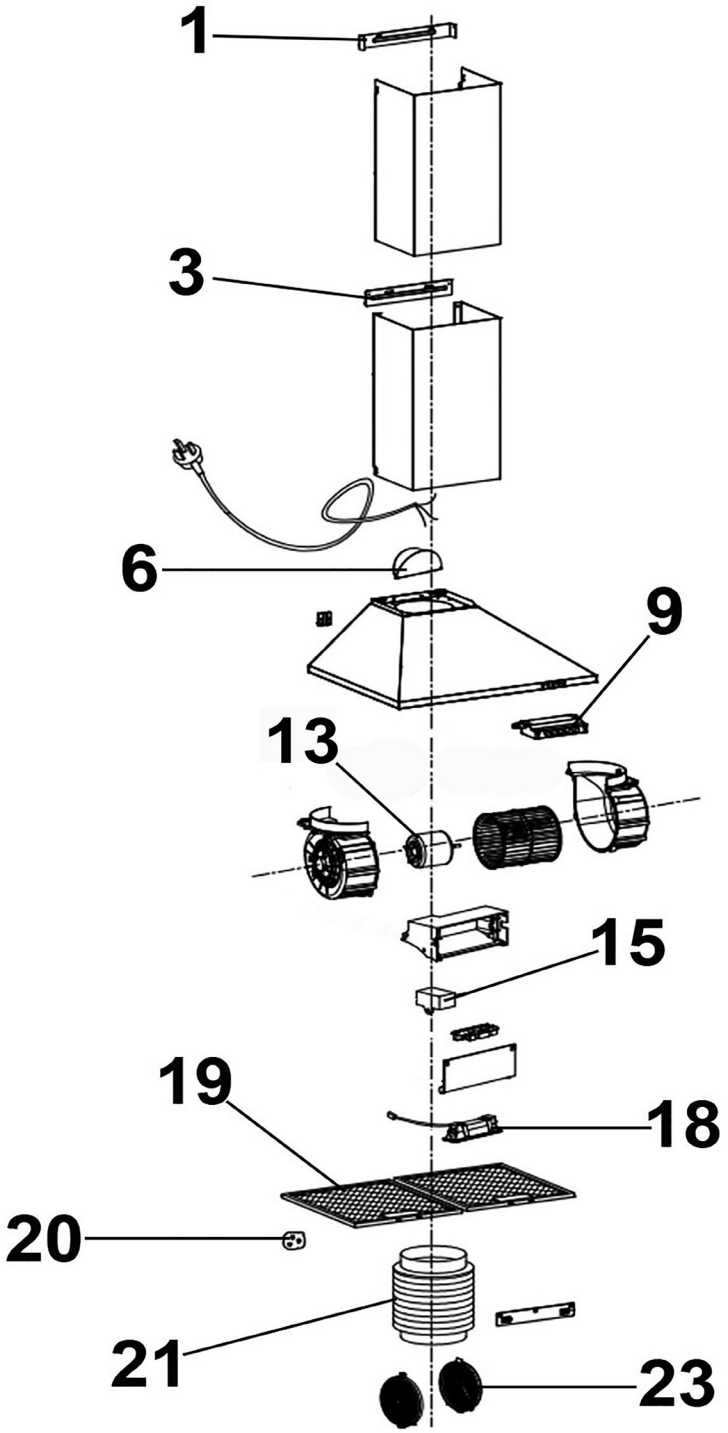

Item	Part No.	Description
1	DH10734	Inside Chimney Bracket
3	DH10735	Outside Chimney Bracket
6	DH11145	V-Flap
9	DH11345	Push Button Assembly
13	DH11346	Motor
15	DH11347	Capacitor

Item	Part No.	Description
18	DH10324	LED Light
19	DH11348	Aluminium Filter
20	DH11349	Screw/Fixing Kit
21	DH11350	Expansion Pipe
23	DH132	Carbon Filter - **Please see Catalogue**

NOTE: It is our policy to continually improve products and as such we reserve the right to alter data, specifications and component parts without prior notice.
IMPORTANT: No liability is accepted for incorrect use of product. Spare parts must be fitted by a competent person
WARRANTY: Guarantee is 12 months from purchase date, proof of which will be required for any claim.

Jack Sealey Ltd t/a Baridi, Kempson Way, Suffolk Business Park, Bury St Edmunds, Suffolk, IP32 7AR UK
Jack Sealey (EU) Ltd t/a Baridi, Farney Street, Carrickmacross, Co. Monaghan, A81 PK68 Ireland
Tel: 01284 757575 • **Email:** support@baridi.co.uk • **Web:** www.baridi.co.uk